Refrigerant Gas Detector

Infrared (HCFC, HFC) -10...+40C RDI

Nov.10

RDI Display

RDI Wall

RDI Duct

CE

Features

- **Two beam infrared gas sensor (NDIR)**
- **Life expectancy > 10 years**
- **Maintenance periods > 5 years**
- **Good resistance to poising**
- **High accuracy, selectivity and reliability**
- **Automatic drift and temperature compensation**
- **Comfort calibration with selective access release**
- **Reacts quickly**
- **Integrated heating element temperature controlled for down to -40 degree(option)**

Technical Data

Gas	Refrigerant gases
Sensor Element	Two.beam infrared (NDIR)
Measuring range	0-2000ppm
Response time	t90 <30 sec.
Accuracy	< 2% of measuring range
Repeatability	< 2% of measuring range
Resolution	10ppm
Long term zero-point drift	< 2% of measuring range/year
Long term output drift	< 3% of measuring/year
Pressure range	800-1100hPa
Storage time	Max 6 months
Mounting height	
Output signal	
(0)4-20mA	Load < 500ohm
(0)2-10Vdc	Load > 50kohm
Starting point 0/20%	Proportional, overload and short circuit proof
Relay 1	30Vac/dc, 0,5A, pot.free SPDT
Relay 2	Dito SPNO/SPNC
Wiring distance	Current signal cirka 500m Voltage signal cirka 200m
Cable entry	1 x M20
Serial interface	RS4819200 Baud(9600Modbus)
Power supply	18-28Vac/dc reverse polarity prot.
Power consumption	45mA, max (1,1VA) without option
Analogue input	4-20mA, input resistance 200ohm
Expected lifetime	>10 years
Rec. calibration interval	> 5 years
Humidity range	0-95%rH non-condensing
Operating range	Continuous -10 up to +40C
Rating	IP65 Protection Cl. Halogenfree
Pressure range	Atmospheric +/-15%

These products meet the CE-approval

Application

For leak detection in cooling systems with refrigerant gases (HCFC and HFC) as cooling agents, and also within a wide range of commercial and industrial applications.

Due to the analogue ouput signal and the RS485 serial interface the refrigerant transmitter is compatible to any electronic analogue control, DDC/PLC control or automation system.

Description

Refrigerant gas detectors with two-beam infrared sensor for continuous monotoring of ambient air to detect hydrochlorofluorocarbon (HCFC) and hydrofluorcarbon (HFC) refrigerants..

The infrared measuring method with integrated temperature and drift compensation stands for highest accuracy, selectivity and reliability despite of the calibration interval of 5 years.

Ordering Codes

Manual adressing and calibration

RDI 123VC	R123	Refrigerant Gas Detector 0-2000ppm
RDI 125VC	R125	Refrigerant Gas Detector 0-2000ppm
RDI 22VC	R22	Refrigerant Gas Detector 0-2000ppm
RDI 134aVC	R134	Refrigerant Gas Detector 0-2000ppm
RDI 404aVC	R404	Refrigerant Gas Detector 0-2000ppm

Adressing and calibration with service tool

RDI 123VCT	R123	Refrigerant Gas Detector 0-2000ppm
RDI 125VCT	R125	Refrigerant Gas Detector 0-2000ppm
RDI 22VCT	R22	Refrigerant Gas Detector 0-2000ppm
RDI 134aVCT	R134	Refrigerant Gas Detector 0-2000ppm
RDI 404aVCT	R404	Refrigerant Gas Detector 0-2000ppm

MOD	Protocol for Modbus
CUST	Protocol for customers specifications

cont.

Relay Package

The two relays are activated in dependence of gas concentration.

If the gas concentration exceeds the adjusted alarm threshold, the corresponding relay switches on.

If the gas concentration falls below the threshold minus hysteresis, the relay switches off again.

The contact function for relay 2, NC (normally closed) or NO (normally open) can be selected via the jumper NO/NC.

See figure.

Relay 1 is equipped with a change-over contact.

Via the Modbus interface the two alarm thresholds and the hysteresis are freely adjustable at the PC within the measuring range.

The procedure can be read from the user manual ¨Modbus Software¨.

The following parameters are factory-set for the measuring range 0-2000 ppm.

0-2000ppm	**Threshold**
Relay output 1	**500 ppm**
Relay output 2	**1000 ppm**
Switching hysteresis	**100 ppm**

Terminal Block

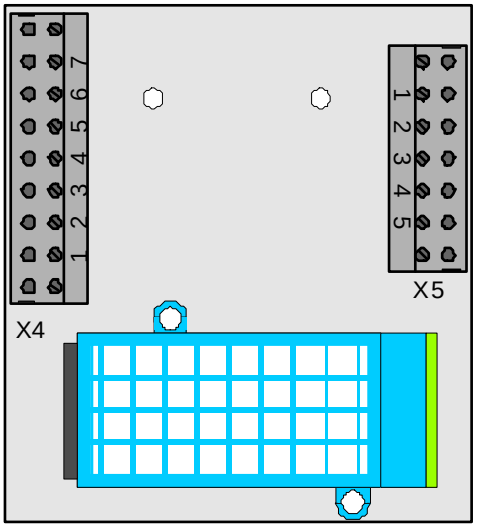

PCB-board

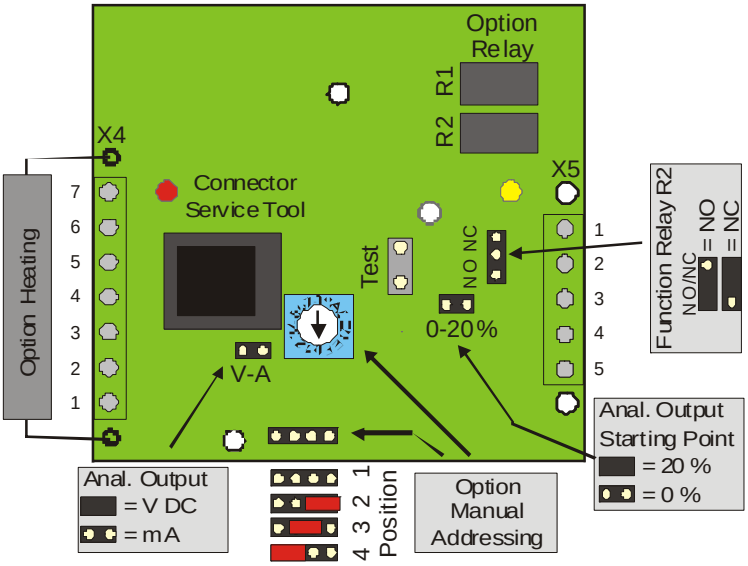

Selection analog output signal

Jumper 0- 20 %	Jumper V-A	Output signal
Not set	Not set	0 – 20 mA
Set	Not set	4 – 20 mA
Not set	Set	0 – 10 V
Set	Set	2 – 10 V

Connecting Diagram

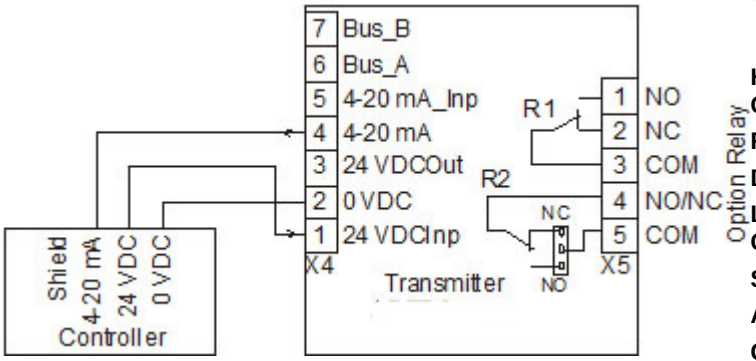

HEAT	Temp.controlled heating element 3C +/-2C 0,3VA
GCD	Protocol for GCD-series
REL	Relay pack see rear side
DUCT	Duct Mounting
LCD	Two lines, 16 characters each
CAL 2	Calibration Kit for transmitters
STAIN	Enclosure of stainless steel
AIN	4-20mA analogue input
GAS 17	Calibration gas 17 liter
REG	Pressure regulator flow adjusted to 0,5 lit/min.
Warning devices	See special datasheet
Warning signs	See special datasheet